Cambelt

SCORPION 2410 PORTABLE TRANSLOADER

STEEP LIFT. SMALL FOOTPRINT.

Up to 150 tons per hour on a 60° incline, from a 5" inlet that rolls under the railcar.

150	600	60°	5"
UP TO · TPH* RATED	UP TO · FPM BELT SPEED	CONVEYOR INCLINE	TOP OF RAIL TO INLET

Engineered to Do the Impossible.

CAMBELT.COM · 801.972.5511

PROUDLY MADE IN THE USA

*rated at 100 PCF. actual capacity depends on material, particle size, moisture and loading conditions. Photos show the Scorpion 1210.

THE ENGINEERING

ENGINEERED TO DO THE IMPOSSIBLE.

Most conveyors reach a truck or bin the conventional way: a long, shallow boom. The Scorpion 2410 climbs at 60° instead. Cambelt manufactures its own belt and designs the conveyor around it, and that is what lets a machine this compact lift this steep.

01
CAMBELT 2410
24" monolithic SBR belt, 1.0" nubs

→

02
ENCLOSURE
Creates a vortex that holds material to the belt

→

03 · UP TO
600 FPM + 60°
Fast belt, steep incline

→

04 · UP TO
150 TPH*
Steep lift. Small footprint.

01 · IT STARTS WITH THE BELT

The Scorpion 2410 runs a 24" Cambelt 2410: a monolithic SBR belt with 1.0" nubs, molded as one piece by Cambelt in Salt Lake City. The nubs grip the material, so it stays in place at up to 600 FPM on a 60° incline instead of sliding back. One piece means no glue to fail.

MONOLITHIC SBR CAMBELT: NUBS AND SIDEWALL MOLDED AS ONE.

02 · ENCLOSED BY DESIGN

The belt runs inside a precision-manufactured enclosed conveyor. The enclosure creates a vortex that holds material to the belt, and that is what lets the belt run at higher speeds. It also keeps material on the belt and reduces dust at the source.

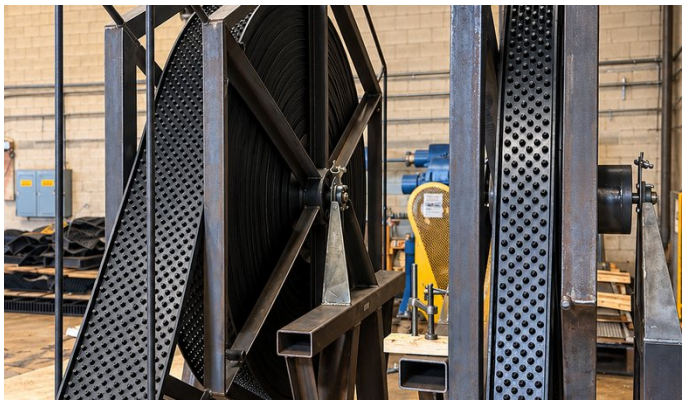

CAMBELT ON THE REEL AT THE SALT LAKE CITY FACTORY.

MADE BY CAMBELT

WE DON'T BUY THE BELT. WE MAKE IT.

Cambelt has manufactured one-piece molded belting in Salt Lake City since 1960. Owning the belt is what lets us engineer the conveyor around it.

THE DISCHARGE HEAD, 15'-4" UP A 60° INCLINE.

03 · FAST AND STEEP

The Scorpion 2410 belt runs at up to 600 FPM on a 60° incline. Speed drives capacity: the faster the belt moves, the more tons it carries. A steep incline reaches discharge height with less conveyor, so the machine can be shorter.

04 · THE RESULT

Up to 150 TPH* with just 19'-10" from inlet to discharge and a 15'-4" discharge height, driven by a 15 HP motor through a simple V-belt drive. A conventional conveyor climbing at a shallow angle needs more than twice the length to reach the same height.

WHY THE ANGLE MATTERS

SAME DISCHARGE HEIGHT. LESS THAN HALF THE LENGTH.

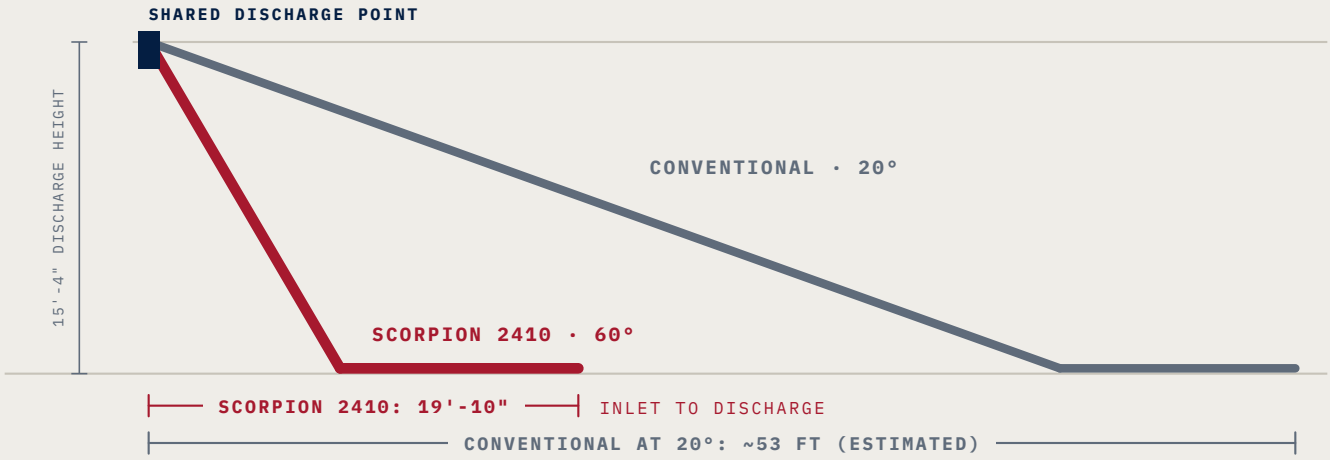

THE SCORPION 2410 ISN'T A SMALLER CONVEYOR. IT'S A STEEPER WAY TO REACH THE TRUCK.

*RATED AT 100 PCF. ACTUAL CAPACITY DEPENDS ON MATERIAL, PARTICLE SIZE, MOISTURE AND LOADING CONDITIONS.

THE ECONOMICS

YOU'RE BUYING TPH. NOT A MACHINE.

Customers don't buy a transloader for the steel. They buy the tons it moves every hour. Don't compare machine price. Compare what you're getting for it.

01 CAPITAL COST PER TPH

EQUIPPED PURCHASE PRICE ÷ RATED TPH

What each ton of hourly capacity costs you up front. Compare equipped machines, not base prices.

02 ACTUAL PRODUCTIVITY

TONS MOVED ÷ OPERATING HOURS

Car changes and repositioning eat into every rating. A machine that tows in with a forklift and rolls under the car at rail level gets back to work sooner.

03 TRUE COST PER TON

TOTAL OWNERSHIP COST ÷ TONS MOVED

Purchase, power, labor, parts and downtime, spread across every ton the machine moves in its life.

SCORPION 2410 CAPACITY

TONS PER HOUR, BY MATERIAL

At up to 600 FPM. Rated up to 150 TPH at 100 PCF.

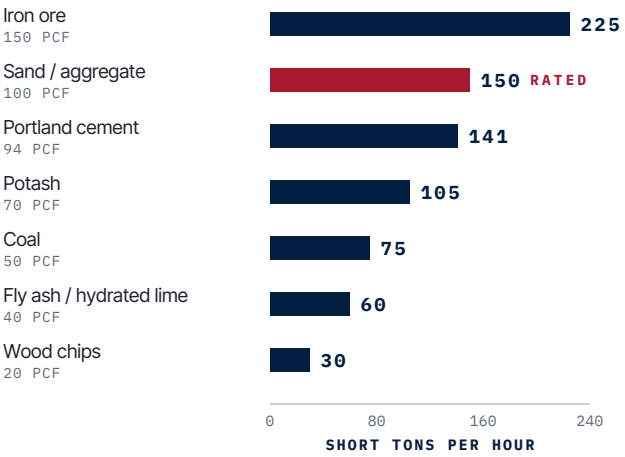

DO THE MATH

EQUIPPED QUOTE ÷ RATED TPH

SCORPION 2410	$ _____	÷ 150 TPH	= $ _____
YOUR ALTERNATIVE	$ _____	÷ ____ TPH	= $ _____

COMPARE LIKE FOR LIKE: DUST COLLECTION AND HYDRAULIC DRIVE ARE OPTIONS. QUOTE BOTH THE SAME WAY.

~40 MIN

To unload a 100-ton hopper car at the rated 150 TPH. Low profile and forklift towable, so the next car is a short move away.

ILLUSTRATIVE: RATED CAPACITY, CONTINUOUS FEED. ACTUAL RESULTS DEPEND ON SITE CONDITIONS.

BUILT TO MOVE

TOW IT IN. SET IT DOWN.

Move the Scorpion 2410 with the forklift already on site. No crane. No pit.

Positioning at the railcar is the most hands-on part of transloading. The Scorpion 2410 makes it quick: hook up a towbar, tow it into place with a forklift and roll the 5" inlet under the car. Set the lift jacks and it is ready to run.

LOW-PROFILE INLET AND TOW END.

TOWED IN BY FORKLIFT, INLET UNDER THE HOPPER CAR.

01 FORKLIFT TOWABLE

Tow it into place with a towbar and the forklift you already have on site.

02 WHEELS FOR MOBILITY. LIFT JACKS FOR SETUP.

Tow it in on its own wheels. Once it is in position, set the lift jacks to level and stabilize it before it runs.

03 ROLLS UNDER THE CAR

Top of rail to the slim-line inlet is 5", so it rolls easily under the railcar.

04 LOCKING REAR WHEELS

Lock them at 90° to move the machine laterally down the railcar, hopper to hopper. Lock them straight to tow.

FORKLIFT	5"	90°	480V
TOWABLE	TOP OF RAIL TO INLET	REAR WHEEL LOCK	3-PHASE SITE POWER

PUT UP TO 150 TPH WHERE YOU NEED IT.

BUILT TO KEEP RUNNING

ENGINEERED FOR UPTIME.

Downtime at the railcar costs more than the machine does. The Scorpion 2410 is built around the parts that fail, and made to be serviced fast.

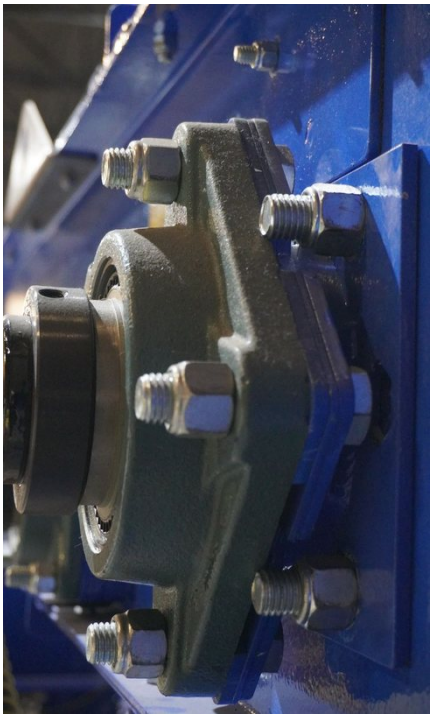

GRITLOCK SEAL ASSEMBLY

Made for double the life of standard bearings. Cambelt's patent-pending GritLock seal assembly adds felt debris protection that keeps grit out of the bearing, so the parts that turn keep turning at up to 600 FPM.

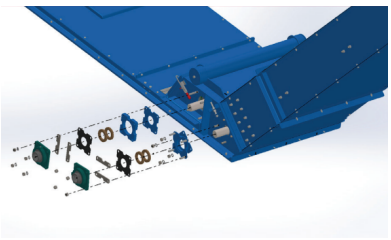

EXPLODED VIEW OF THE GRITLOCK SEAL ASSEMBLY. PATENT PENDING.

SERVICE ACCESS

Access doors on the inlet conveyor open right at the working end, so crews can safely open them to inspect the belt and verify tracking.

THE BELT, FROM THE PEOPLE WHO MAKE IT

Cambelt is a monolithic SBR belt: sidewall, nubs and base belt molded as one piece. There are no splices or glue lines to fail. Replacement belts, parts and technical support come straight from the Salt Lake City factory.

MONOLITHIC SBR CAMBELT™

ONE PIECE. NO SPLICES TO FAIL.

Molded as one piece in Salt Lake City since 1960. No splices, seams or glue lines to come apart.

CONFIGURED FOR THE JOB

READY TO WORK.

Quoted ready to be wired: a 15 HP electric drive that runs on standard 480V, 3-phase site power. No site power? Choose the hydraulic drive and run it off your own equipment.

STANDARD

15 HP ELECTRIC V-BELT DRIVE

480V, 3-phase. Simple, serviceable power transmission.

OPTION

HYDRAULIC DRIVE

Runs off your equipment's auxiliary hydraulics. No site power needed.

OPTION

DUST COLLECTION

Controls dust at the transfer point.

RENT IT · OR TRY BEFORE YOU BUY

Not ready to commit capital? You don't have to. Put a Scorpion 2410 to work on your terms.

01

RENTAL AVAILABILITY

Rent a Scorpion 2410 when the work is temporary or the timing is tight.

02

TRY BEFORE YOU BUY

Run the machine on your site first. Buy it when it has proven itself on your material.

Talk to Cambelt about rental availability or a trial on your site.

SPECIFICATIONS

SCORPION 2410 SPECIFICATIONS

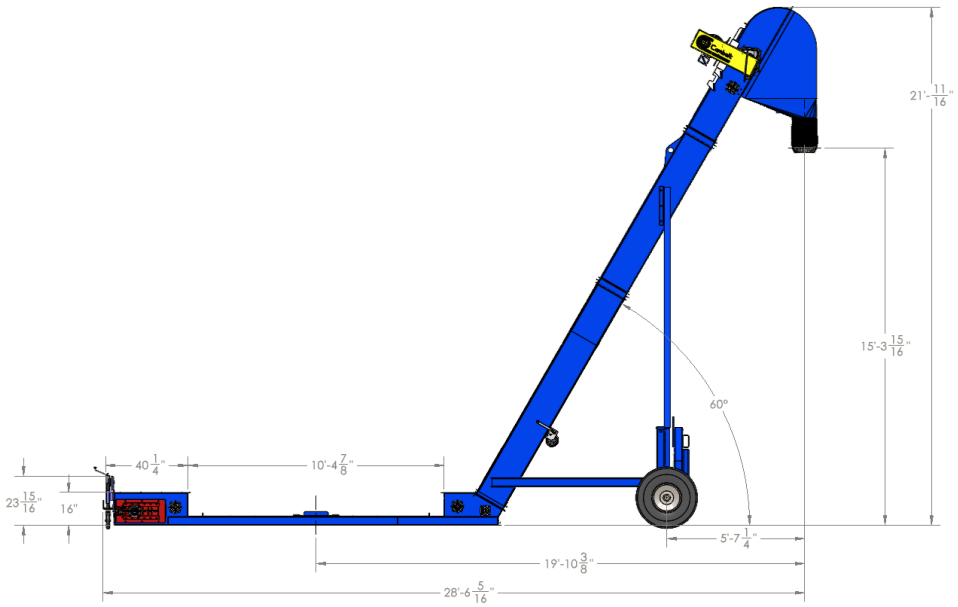

BELT	24" Cambelt 2410, monolithic SBR, 1.0" nubs
BELT SPEED	Up to 600 FPM
CONVEYOR INCLINE	60°
RATED CAPACITY	Up to 150 STPH at 100 PCF*
DRIVE	15 HP electric, V-belt drive
POWER	480V, 3-phase
INLET HEIGHT	5" top of rail to inlet
MOBILITY	Forklift towable with towbar; sets on its own wheels
REAR WHEELS	Locking, straight or 90° for lateral moves along the railcar
OVERALL HEIGHT	21'-0 11/16"
DISCHARGE HEIGHT	15'-3 15/16"
INLET TO DISCHARGE	19'-10 3/8"
OVERALL LENGTH	28'-6 5/16"
OPTIONS	Hydraulic drive (aux. hydraulics); dust collection
AVAILABILITY	Purchase, rental, or try before you buy

*RATED AT 100 PCF. ACTUAL CAPACITY DEPENDS ON MATERIAL, PARTICLE SIZE, MOISTURE AND LOADING CONDITIONS.

TALK TO AN ENGINEER

SEE IT ON YOUR SITE.

Ask about rental availability or a trial run on your material.

801.972.5511

INFO@CAMBELT.COM

CAMBELT.COM

Cambelt International · 2820 West 1100 South, Salt Lake City, Utah 84104

PROUDLY MADE IN THE USA